MOBILE CRANE / MECHANICAL SYSTEMS

MC-01 / REV B

3D ISOMETRIC STUDY

GENERAL ASSEMBLY

Complete representative mobile crane / isometric + side elevation

A / PRIMARY ISOMETRIC

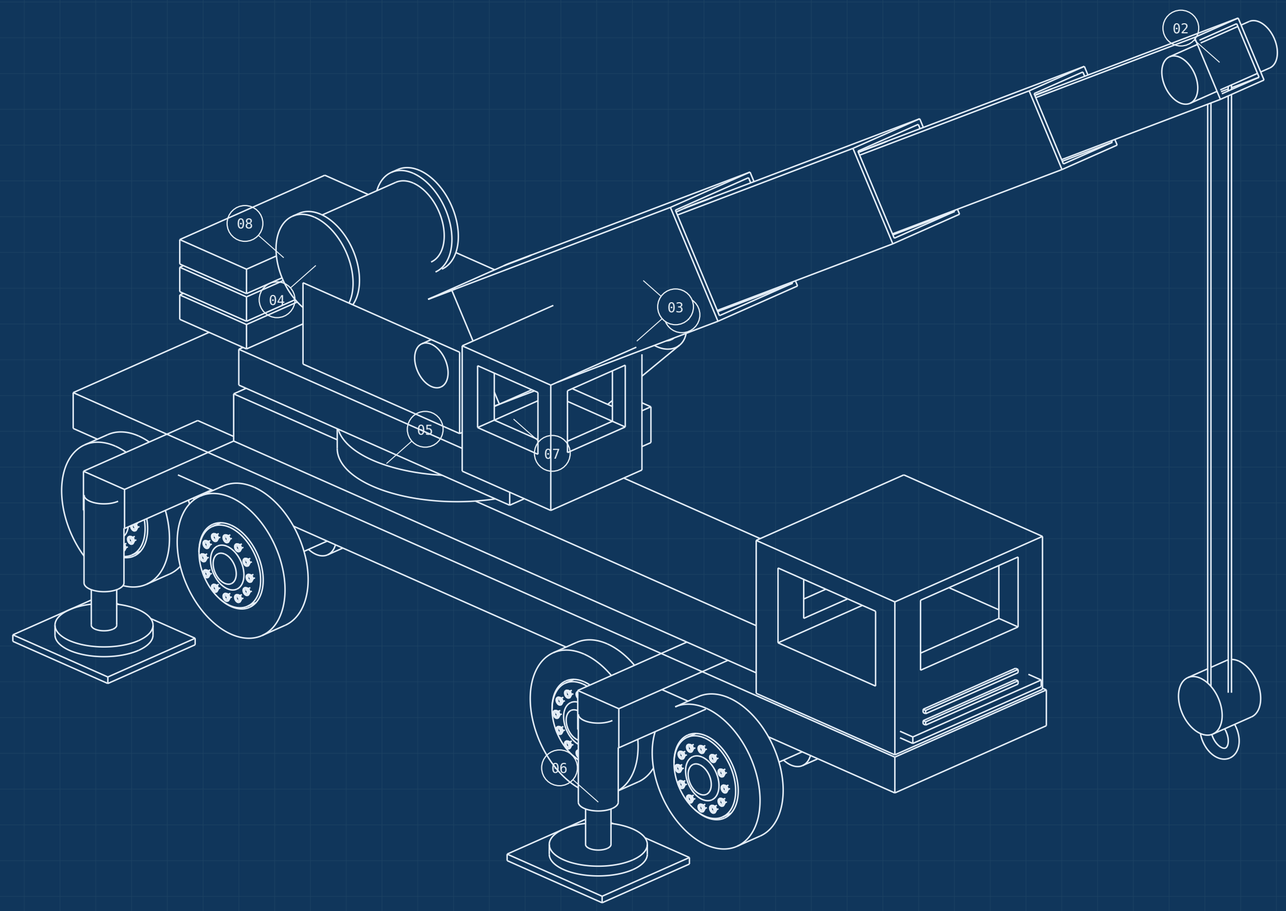

NUMBERED COMPONENT KEY

01 TELESCOPIC BOOM

Nested box sections carry bending and compression.

02 BOOM-HEAD SHEAVE

Redirects hoist rope toward the hook block.

03 ELEVATION CYLINDER

Converts hydraulic pressure into luffing force.

04 MAIN HOIST DRUM

Stores rope and applies line pull through its drive.

05 SLEW BEARING

Transfers upper loads and overturning moment to the carrier.

06 OUTRIGGER AND JACK

Transfers carrier reactions through pads and mats.

07 OPERATOR CAB

Houses motion controls and crane-state displays.

08 COUNTERWEIGHT

Contributes resisting moment and balances upper machinery.

B / SIDE ELEVATION / OVERALL ARCHITECTURE

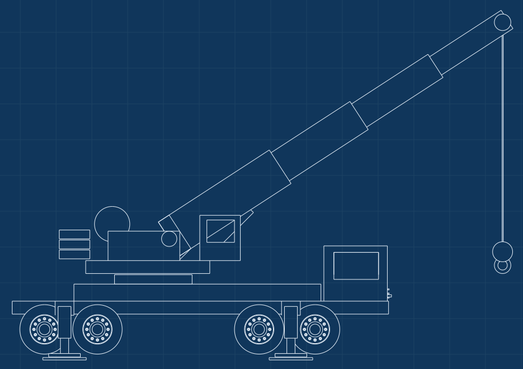

TECHNICAL BASIS: [1,2,5,6]

SYSTEMS WORK TOGETHER

Engine power drives pumps. Valves meter oil to cylinders for linear motion and to motors for rotation. The boom positions the suspension point; the hoist moves the rope. Structural loads pass through the upper, slew bearing, carrier and ground supports.

GEOMETRY CHANGES THE LOAD

Boom angle, extension, slew direction and support spread change the working geometry. Allowable lifting capacity comes from the applicable configured load chart. Hydraulic force alone does not establish capacity.

CONCEPTUAL MECHANICAL GEOMETRY / NOT TO SCALE / NOT FOR FABRICATION

Generic assemblies; OEM designs, circuits and ratings vary. No dimensions, settings or capacities are specified.

VANCOLE | DYLAN VANORDEN

2026-11-22 | 24 x 18 in | 01 / 11

LUFF CYLINDER / INTERNAL SECTION

Pressure barrel, piston, rod, gland, sealing group and holding manifold

A / PRIMARY ISOMETRIC

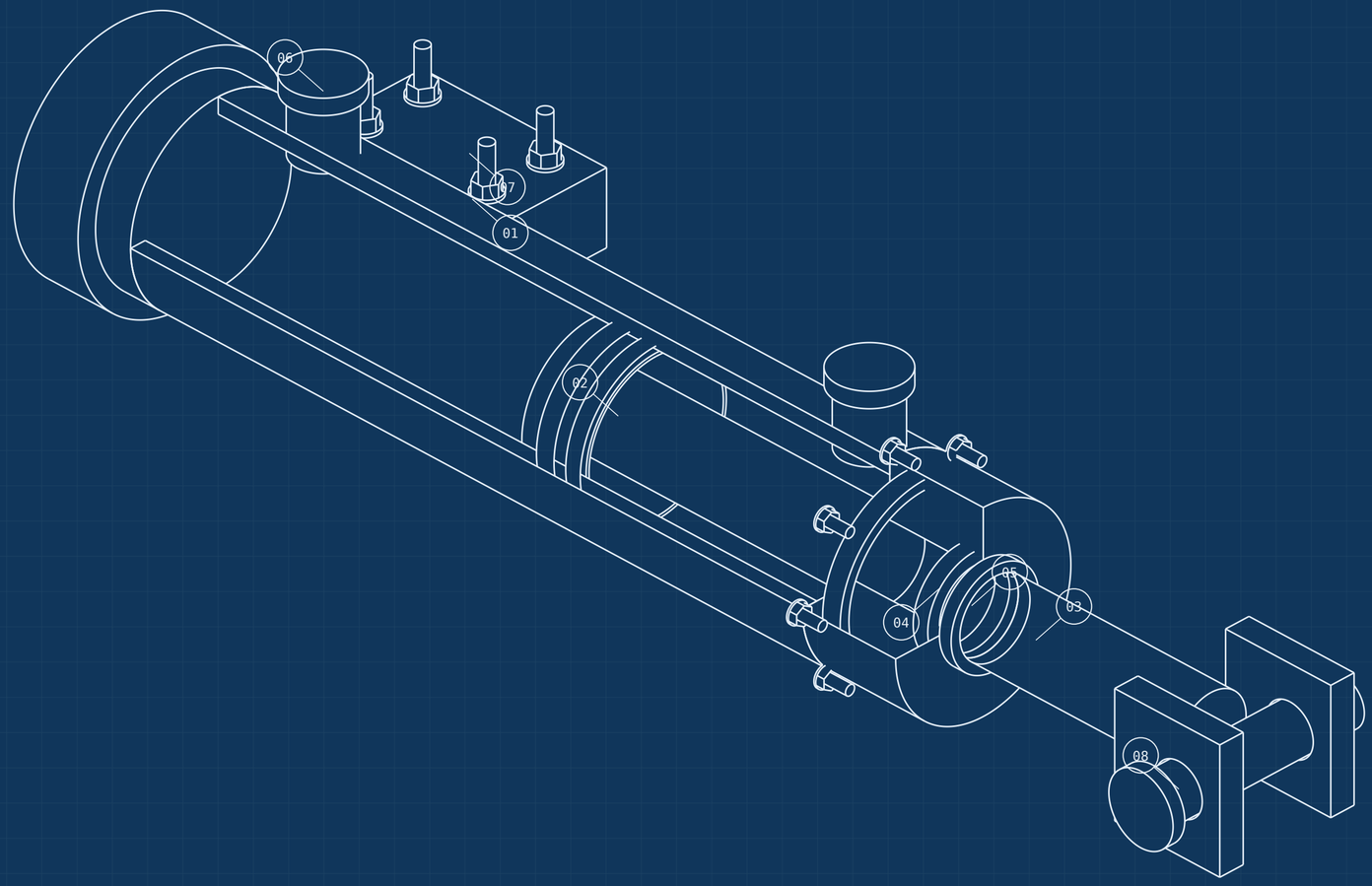

NUMBERED COMPONENT KEY

01 CYLINDER BARREL

Honed pressure tube encloses the working chambers.

02 PISTON AND WEAR RINGS

Separate chambers and guide the piston within the barrel.

03 PISTON ROD

Transmits axial force through the external attachment.

04 GLAND / ROD GUIDE

Supports the rod and retains the sealing arrangement.

05 ROD SEAL / WIPER

Pressure seal retains oil; wiper excludes outside debris.

06 HYDRAULIC CONNECTION

Work ports supply and discharge the two chambers.

07 LOAD-HOLDING MANIFOLD

Functional location for actuator-mounted holding protection.

08 CLEVIS AND PIN

Transmit force while permitting angular movement.

B / SEAL STACK / SEPARATED COMPONENTS

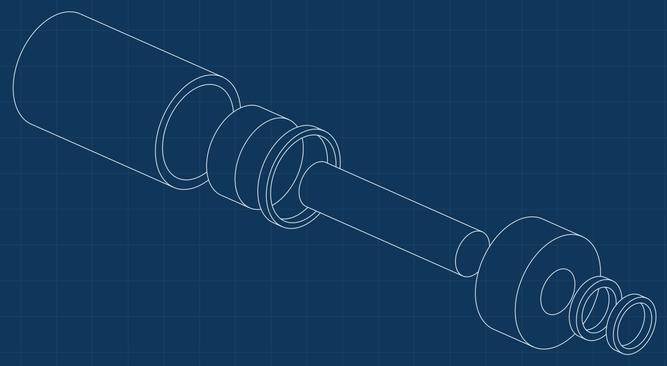

RAISING AND LOWERING

In a common luff arrangement, cap-end supply extends the rod and raises the boom. Lowering reverses supply and meters load-driven discharge. A counterbalance valve controls an overrunning load; a pilot-operated check holds flow but does not provide the same modulation.

WHY THE CUTAWAY MATTERS

The cutaway exposes the piston-to-bore interface and the rod passing through the gland. Real cylinders also use detailed seal grooves, bearing lengths and retention features that are manufacturer-specific. The drawing is explanatory, not a seal installation guide.

TECHNICAL BASIS: [3]

CONCEPTUAL MECHANICAL GEOMETRY / NOT TO SCALE / NOT FOR FABRICATION

Generic assemblies; OEM designs, circuits and ratings vary. No dimensions, settings or capacities are specified.

VANCOLE | DYLAN VANORDEN

2026-11-22 | 24 x 18 in | 02 / 11

AXIAL PISTON PUMP / CUTAWAY

Variable-displacement concept / rotating group and swashplate

A / PRIMARY ISOMETRIC

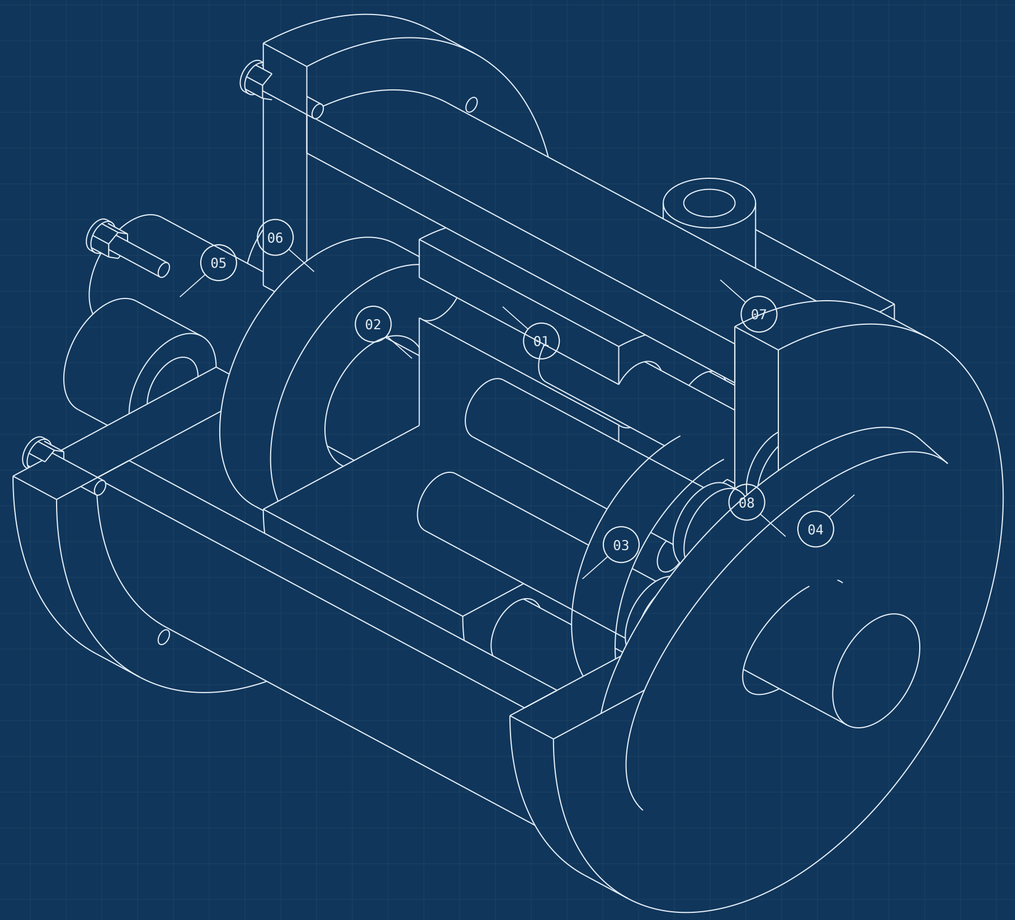

NUMBERED COMPONENT KEY

01 **SECTIONED HOUSING**
Contains the rotating group and collected case leakage.

02 **CYLINDER BLOCK**
Rotates with the shaft; bores guide the axial pistons.

03 **PISTON GROUP**
Reciprocates as slippers follow the inclined swashplate.

04 **SWASHPLATE**
Inclination determines piston stroke and displacement.

05 **DRIVE SHAFT**
Receives mechanical power from the engine or pump drive.

06 **PORT CONNECTIONS**
Connect pressure and inlet circuits; routing varies.

07 **CONTROL HOUSING**
Represents displacement-control hardware.

08 **BEARING / SUPPORT**
Locates the rotating group and supports shaft loads.

B / ROTATING GROUP / EXPLODED CONCEPT

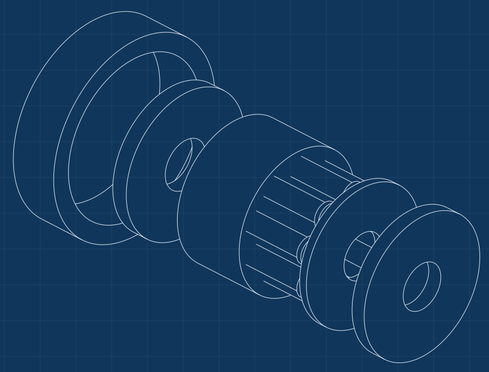

TECHNICAL BASIS: [1,9]

HOW FLOW IS PRODUCED

Shaft rotation and swashplate angle make the axial pistons stroke in their bores. The porting alternately connects chambers to inlet and outlet. Increasing displacement increases theoretical volume per revolution. Pressure develops in response to load and circuit resistance.

LOAD-SENSING PRINCIPLE

A load-sensing system adjusts supply to working pressure and requested flow. Compensation helps multiple functions share supply. Hydraulic power ideally equals pressure times volume flow; actual engine input must also cover mechanical and volumetric losses.

CONCEPTUAL MECHANICAL GEOMETRY / NOT TO SCALE / NOT FOR FABRICATION

Generic assemblies; OEM designs, circuits and ratings vary. No dimensions, settings or capacities are specified.

VANCOLE | DYLAN VANORDEN

2026-11-22 | 24 x 18 in | 03 / 11

DIRECTIONAL VALVE / SPOOL SECTION

Metering lands, work galleries, pilot actuation and spring centering

A / PRIMARY ISOMETRIC

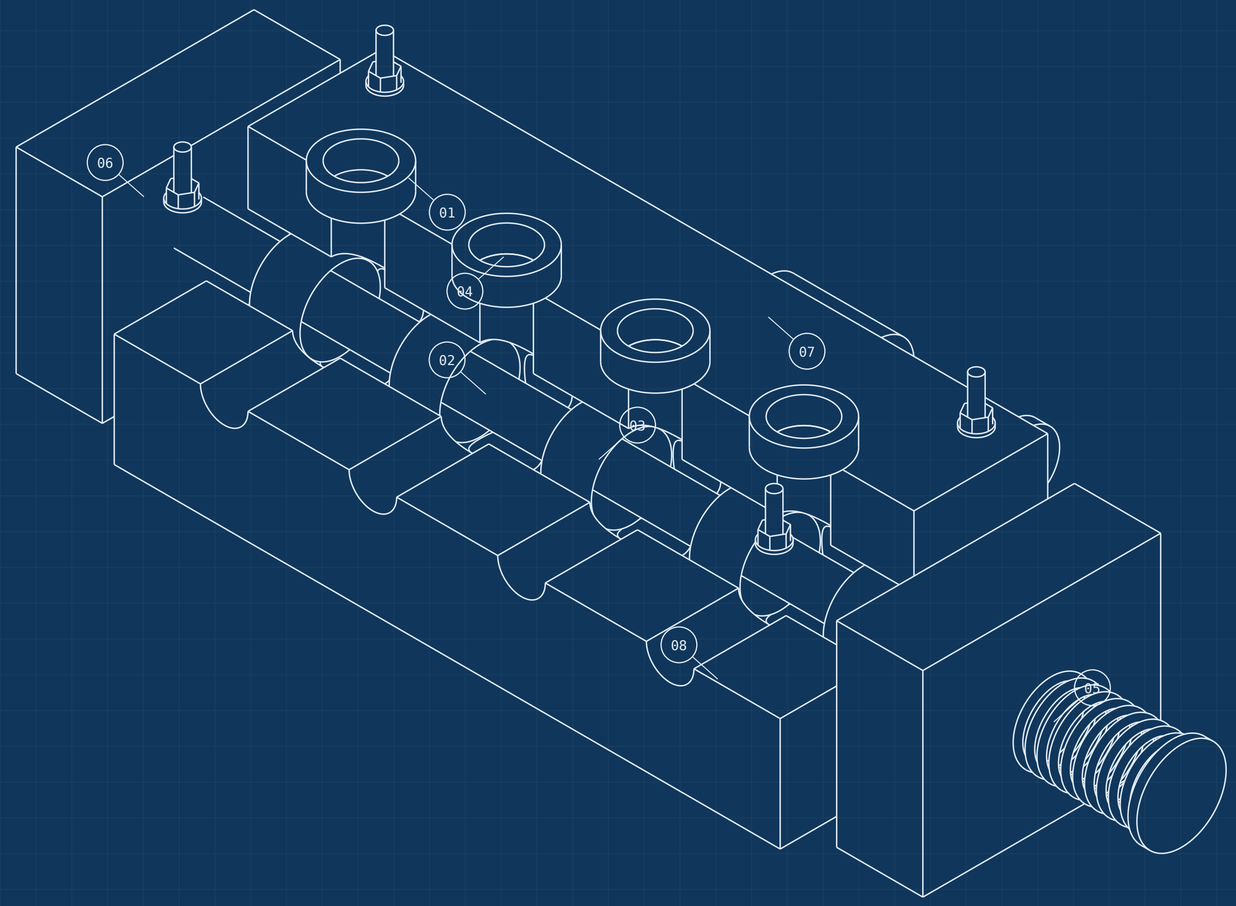

NUMBERED COMPONENT KEY

01 SECTIONED VALVE BODY
Machined galleries connect supply, return and work ports.

02 SPOOL NECK
Reduced diameter allows selected galleries to communicate.

03 METERING LAND
Spool position opens or closes flow paths.

04 WORK-PORT CONNECTION
Connects the valve to an actuator work line.

05 CENTERING SPRING
Restores the designed neutral position when command ends.

06 PILOT / ACTUATOR END
Applies the force that shifts the main spool.

07 RELIEF CARTRIDGE CONCEPT
Illustrates separate local pressure-protection hardware.

08 INTERNAL PASSAGE REGION
Body geometry routes oil; actual passages vary.

B / LONGITUDINAL VIEW / METERING COMPONENTS

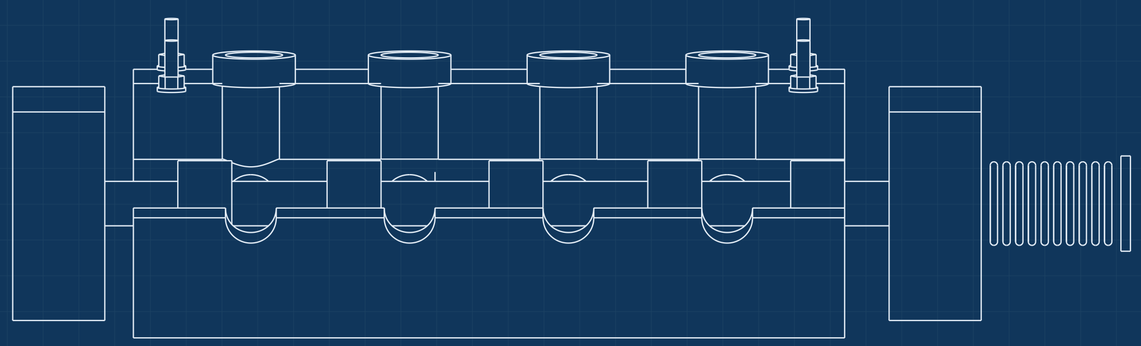

TECHNICAL BASIS: [3,10]

HOW MOTION IS METERED

Shifting the spool uncovers metering edges. One actuator line receives supply while the other discharges through the selected return path. Small commanded openings restrict flow for slow motion; larger openings permit more flow within the available pump supply.

NEUTRAL IS NOT UNIVERSAL

This is a mechanical cutaway concept, not a port-connectivity drawing. Closed-center, open-center, load-sensing and compensated systems use different passage arrangements. A main spool is not a substitute for actuator load-holding protection.

VANCOLE | DYLAN VANORDEN

2026-11-22 | 24 x 18 in | 04 / 11

MOBILE CRANE / MECHANICAL SYSTEMS

MC-05 / REV B

3D ISOMETRIC STUDY

HOIST WINCH / EXPLODED DRIVE

Drum, support structure, planetary gears, brake pack and hydraulic motor

A / PRIMARY ISOMETRIC

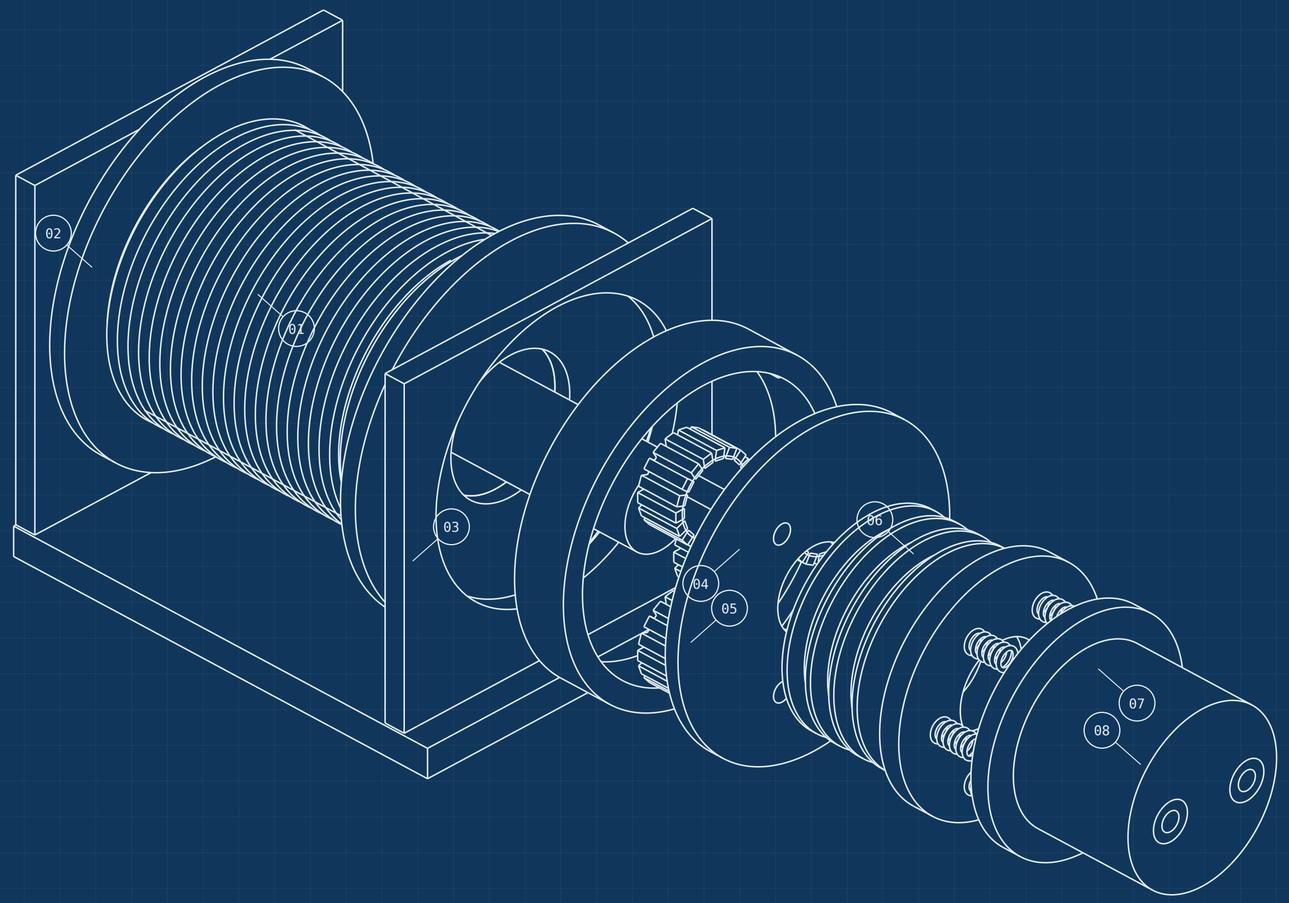

NUMBERED COMPONENT KEY

01 **ROPE DRUM**

Winds rope; effective radius changes with drum layer.

02 **DRUM FLANGE**

Helps contain the rope winding within the drum width.

03 **DRUM SUPPORT**

Carries drum reactions into the upper structure.

04 **SUN GEAR**

Central gear of the illustrative planetary reduction stage.

05 **PLANET GEARS / CARRIER**

Transmit torque through the planetary train.

06 **MULTI-DISC BRAKE PACK**

Alternating friction interfaces provide static holding torque.

07 **SPRING GROUP**

Represents the spring-applied holding action.

08 **HYDRAULIC MOTOR**

Converts pressure difference and flow into torque and rotation.

B / ORTHOGRAPHIC DRIVE VIEW / EXPLODED AXIS

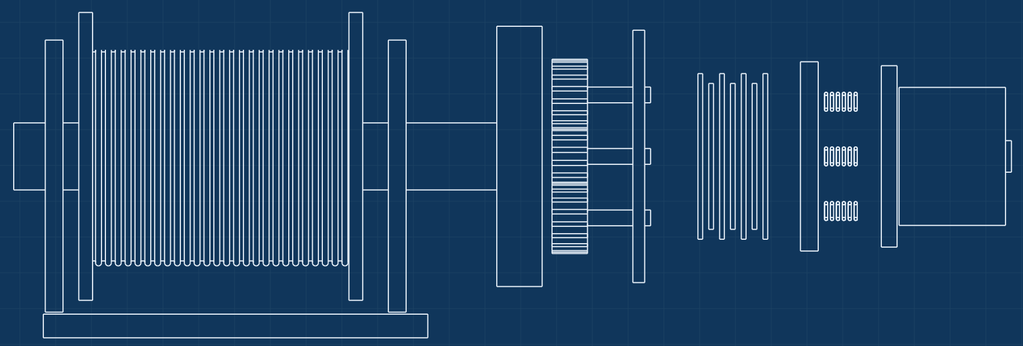

TECHNICAL BASIS: [4,5]

WHY A GEARBOX IS USED

The hydraulic motor turns faster than the rope drum. Reduction gearing trades speed for torque. In a common fixed-ring planetary stage, the sun drives the planets and the carrier supplies reduced-speed output. Tooth profiles and stage counts here are illustrative.

LOWERING AND HOLDING

During lowering, the load may drive the drum and motor; a control valve manages the resulting motion. At rest, a mechanical holding brake secures the drive. Brake release must be coordinated with torque, and motor leakage makes oil alone unsuitable for indefinite holding.

CONCEPTUAL MECHANICAL GEOMETRY / NOT TO SCALE / NOT FOR FABRICATION

Generic assemblies; OEM designs, circuits and ratings vary. No dimensions, settings or capacities are specified.

VANCOLE | DYLAN VANORDEN

2026-11-22 | 24 x 18 in | 05 / 11

SLEW BEARING / EXPLODED ASSEMBLY

Bearing races, rolling elements, ring teeth, drive pinion and rotary joint

A / PRIMARY ISOMETRIC

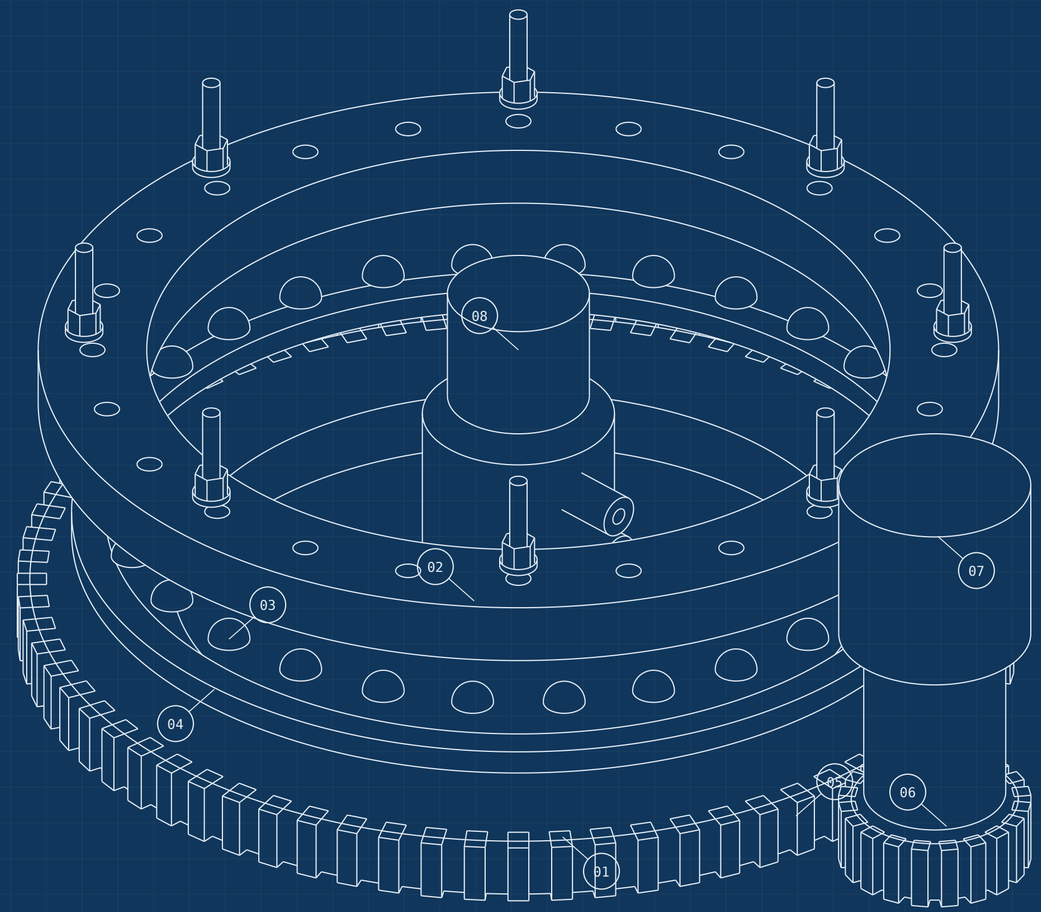

NUMBERED COMPONENT KEY

01 LOWER MOUNTING RACE
Connects the bearing assembly to one supporting structure.

02 UPPER MOUNTING RACE
Connects the other structure and locates the rolling track.

03 ROLLING ELEMENTS
Transfer axial and radial load and overturning moment.

04 CAGE / SEPARATOR CONCEPT
Maintains spacing between rolling elements.

05 RING GEAR TEETH
Engage the swing-drive pinion.

06 DRIVE PINION
Applies drive torque at the toothed ring.

07 SWING DRIVE UNIT
Represents the reduction gearbox and hydraulic motor.

08 CENTER ROTARY JOINT
Transfers selected hydraulic services across rotation.

B / PLAN VIEW / PINION ENGAGEMENT

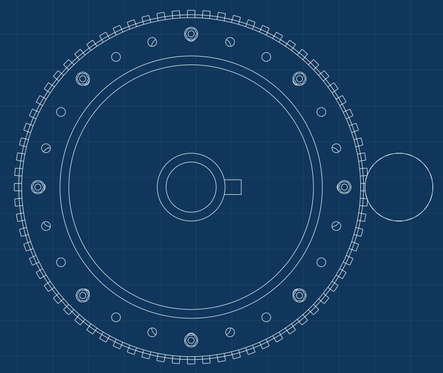

STRUCTURE AND ROTATION

The slew bearing is a structural interface. Rolling elements and races carry the upper machinery into the carrier while allowing rotation. Mounting bolts and supporting flanges are part of the load path. The swing drive applies torque through the pinion and ring gear.

TWO DIFFERENT CENTER SYSTEMS

The rotary joint transfers hydraulic services; it is not the structural bearing. An electrical slip ring or other model-specific interface may handle signals. Actual bearings may use different rolling-element arrangements, seals, gears and bolt patterns.

TECHNICAL BASIS: [4,5]

VANCOLE | DYLAN VANORDEN
2026-11-22 | 24 x 18 in | 06 / 11

TELESCOPIC BOOM / INTERNAL VIEW

Nested sections, overlap, wear pads, telescope actuator and rope-pull concept

A / PRIMARY ISOMETRIC

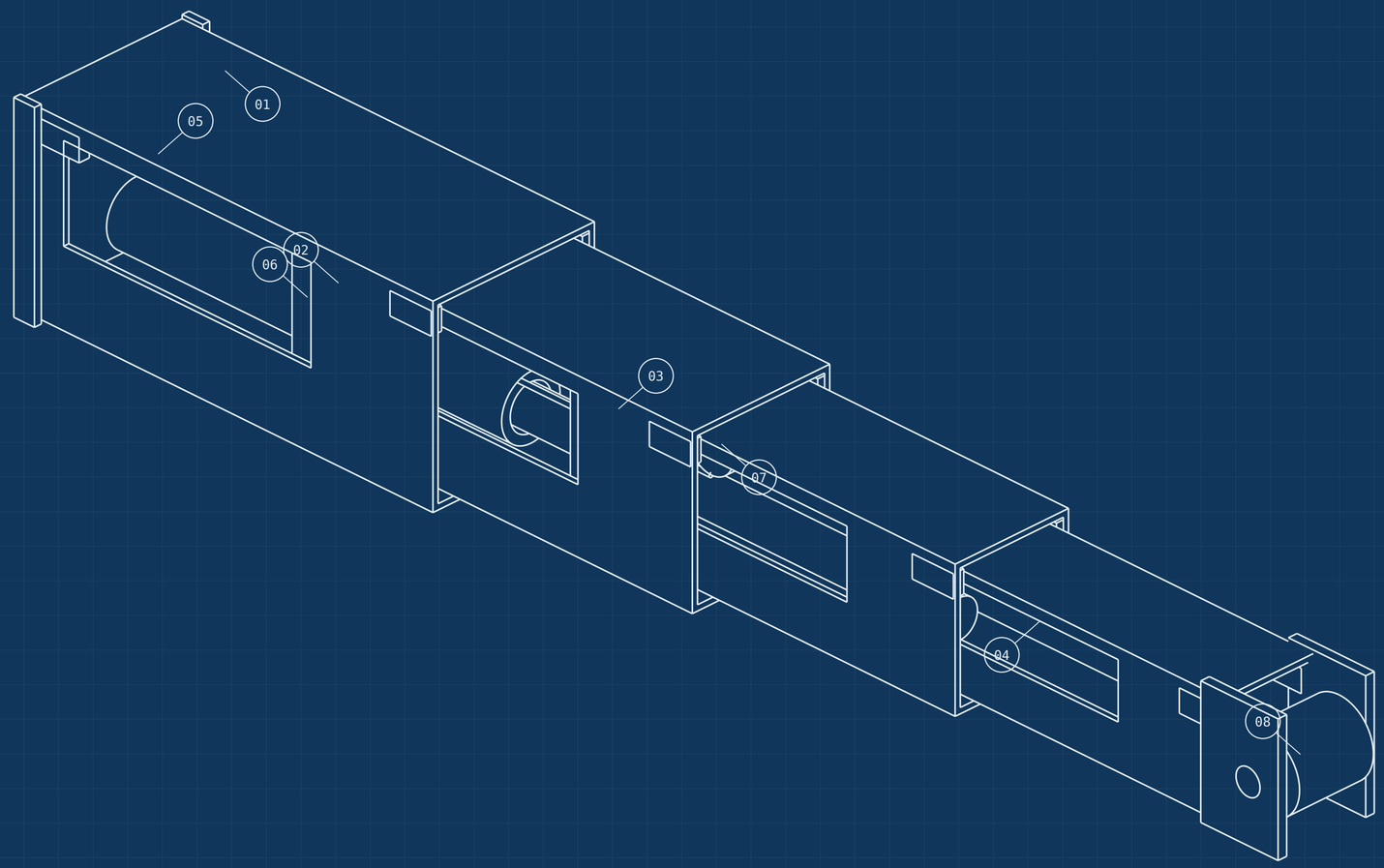

NUMBERED COMPONENT KEY

01 BASE BOOM SECTION

Supports the nested sections and connects to the upper.

02 FIRST MOVING SECTION

Slides on guidance surfaces within the base.

03 INTERMEDIATE SECTION

Carries load through its overlap with adjacent sections.

04 FLY SECTION

Provides the outer reach and supports the boom head.

05 GUIDANCE PAD REGION

Distributes contact loads and controls section clearance.

06 TELESCOPE CYLINDER

Provides linear drive in this hydromechanical concept.

07 ROPE-PULL SHEAVE

Represents extension / retraction synchronization hardware.

08 BOOM-HEAD SHEAVE

Redirects hoist rope at the suspension point.

B / SEPARATED BOX SECTIONS / WALL AND OVERLAP FORM

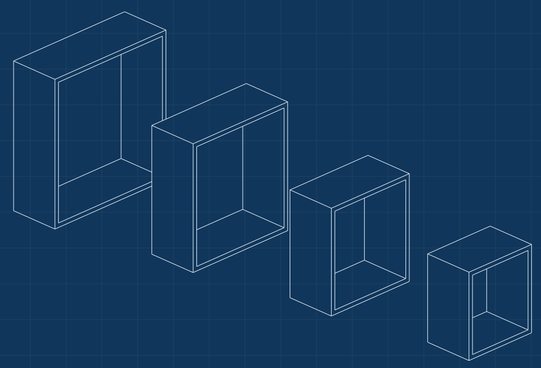

TECHNICAL BASIS: [2]

THIS SHEET SHOWS ONE ARCHITECTURE

In a cylinder-and-rope arrangement, a hydraulic actuator drives one section and internal ropes coordinate additional sections. The depicted rope runs only indicate the mechanism location; they are not a working reeving or anchor schedule.

A DIFFERENT SYSTEM ALSO EXISTS

Single-cylinder pinning systems engage, move and lock selected sections through an automated sequence. They are distinct from the rope-pull concept shown here. Overlap, section status and extension pattern affect structural behavior and the applicable chart.

CONCEPTUAL MECHANICAL GEOMETRY / NOT TO SCALE / NOT FOR FABRICATION

Generic assemblies; OEM designs, circuits and ratings vary. No dimensions, settings or capacities are specified.

VANCOLE | DYLAN VANORDEN

2026-11-22 | 24 x 18 in | 07 / 11

OUTRIGGER / JACK ASSEMBLY

Sliding beam, extension actuator, position pin, jack and ground interface

A / PRIMARY ISOMETRIC

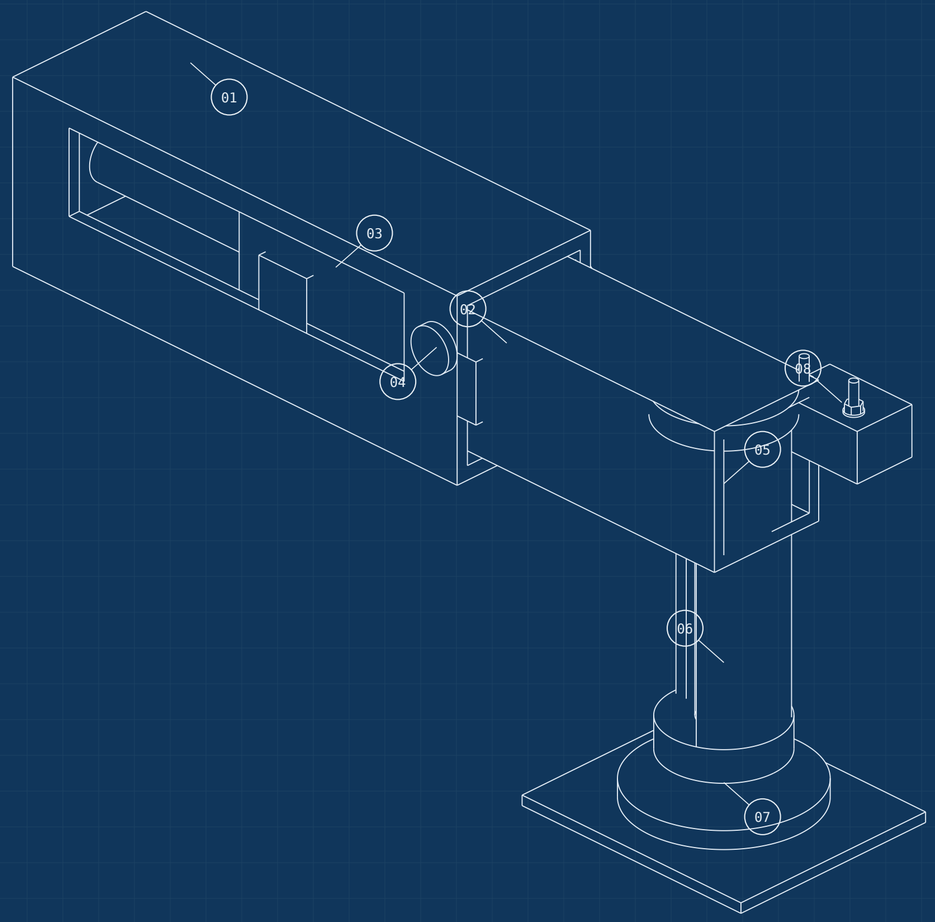

NUMBERED COMPONENT KEY

01 FIXED OUTRIGGER HOUSING
Transfers outrigger bending into the carrier frame.

02 SLIDING EXTENSION BEAM
Establishes the support spread.

03 HORIZONTAL ACTUATOR
Moves the extension beam within its housing.

04 POSITION PIN CONCEPT
Illustrates a possible mechanical extension lock.

05 JACK PISTON
Converts pressure into vertical support force.

06 JACK ROD / GLAND
Transmits axial force and guides the moving rod.

07 SWIVEL FOOT / PAD
Accommodates seating and transfers force into matting.

08 HOLDING MANIFOLD
Retains the loaded cylinder through designed valving.

B / SIDE SECTION / FRAME-TO-GROUND LOAD PATH

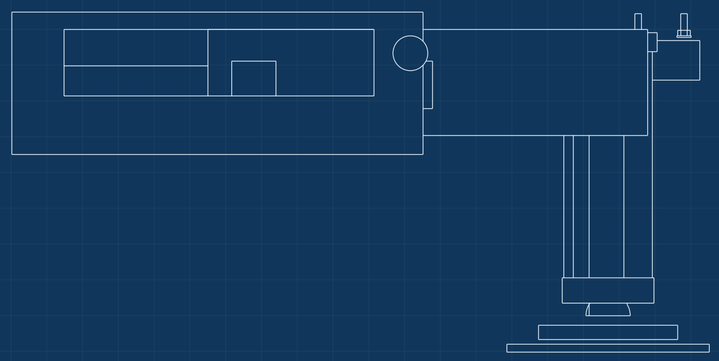

TECHNICAL BASIS: [6]

TWO SEPARATE MOTIONS

The horizontal actuator positions the support beam. The vertical jack transfers the crane reaction to the pad. Wear surfaces guide the sliding beam. Whether position pins, fixed steps or monitored variable extension are used depends on the specific crane.

GROUND IS PART OF THE LOAD PATH

The pad and mat spread force into suitable ground. Support reactions are not simply total weight divided by four; boom position, slew direction and configuration change the distribution. The illustrated foot and mat do not define a required size or bearing capacity.

VANCOLE | DYLAN VANORDEN
2026-11-22 | 24 x 18 in | 08 / 11

MOBILE CRANE / MECHANICAL SYSTEMS

MC-09 / REV B

3D ISOMETRIC STUDY

HOOK BLOCK / EXPLODED SHEAVE ASSEMBLY

Separated near-side plate exposes rope sheaves, axle, bearings and swivel hook

A / PRIMARY ISOMETRIC

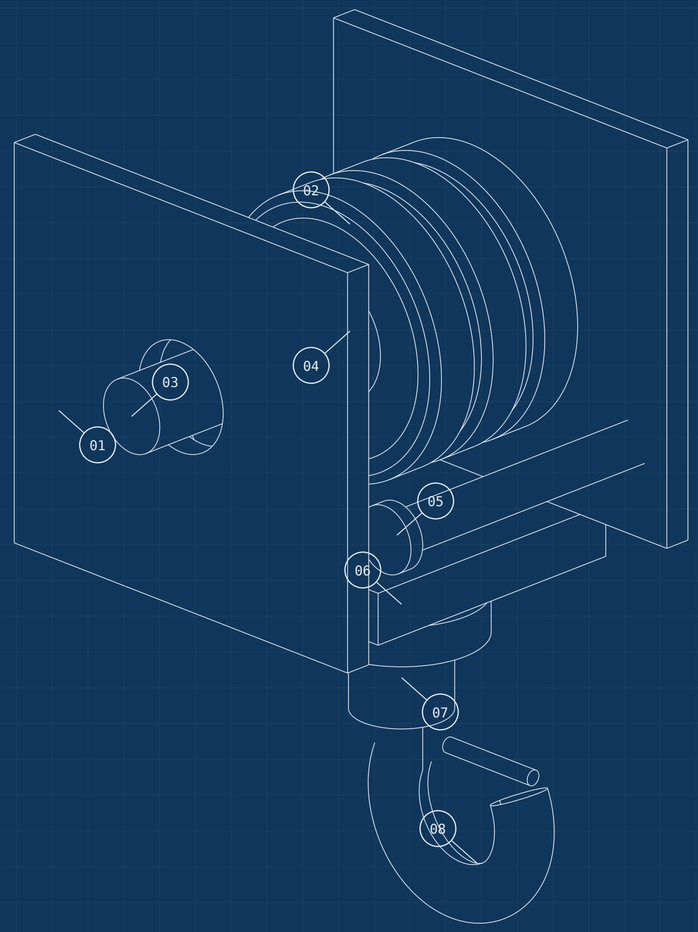

NUMBERED COMPONENT KEY

01 CHEEK PLATE

Forms the block side structure and supports axle reactions.

02 ROPE SHEAVE

Rotates as rope passes around the block.

03 MAIN SHEAVE AXLE

Carries the sheave bearing reactions into the plates.

04 BEARING / SPACER

Permits rotation and controls sheave spacing.

05 TIE / CROSS MEMBER

Connects side plates and carries local frame loads.

06 CROSSHEAD / THRUST SUPPORT

Transfers load from the swivel shank into the block.

07 SWIVEL SHANK

Allows the hook assembly to turn within its support.

08 HOOK BODY

Carries the rigging load; depicted shape is illustrative.

B / AXIAL VIEW / SHEAVE STACK AND LOAD PATH

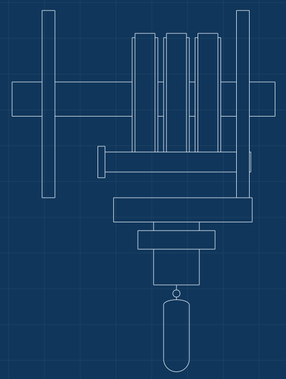

TECHNICAL BASIS: General mechanics; OEM geometry varies

REEVING TRADES SPEED FOR LINE PULL

With n ideal supporting rope parts, hook force is n times line tension and hook speed is line speed divided by n. Real sheave friction and approved rope, line-pull and block ratings limit the result. Sheave count alone does not determine the number of supporting rope parts.

DETAILS THAT MATTER

Rope groove form, sheave diameter, bearings, axle retention, hook forging, latch design and thrust-bearing arrangement are engineered together. This model shows component relationships only. It is not an approved block design or an inspection acceptance reference.

CONCEPTUAL MECHANICAL GEOMETRY / NOT TO SCALE / NOT FOR FABRICATION

Generic assemblies; OEM designs, circuits and ratings vary. No dimensions, settings or capacities are specified.

VANCOLE | DYLAN VANORDEN

2026-11-22 | 24 x 18 in | 09 / 11

MOBILE CRANE / MECHANICAL SYSTEMS

MC-10 / REV B

3D ISOMETRIC STUDY

HYDRAULIC SYSTEM / POWER + CONTROL

Functional relationships alongside three-dimensional component views

01 / PUMP

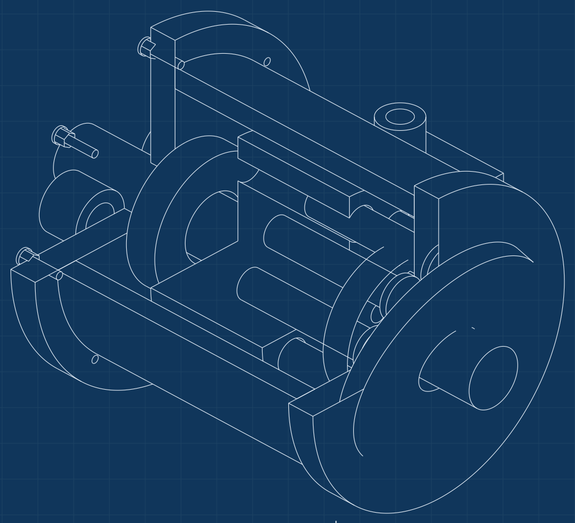

02 / METERING VALVE

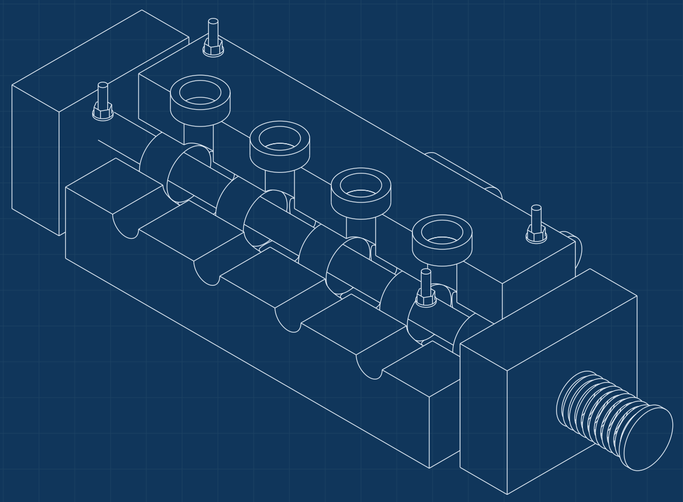

03 / CYLINDER

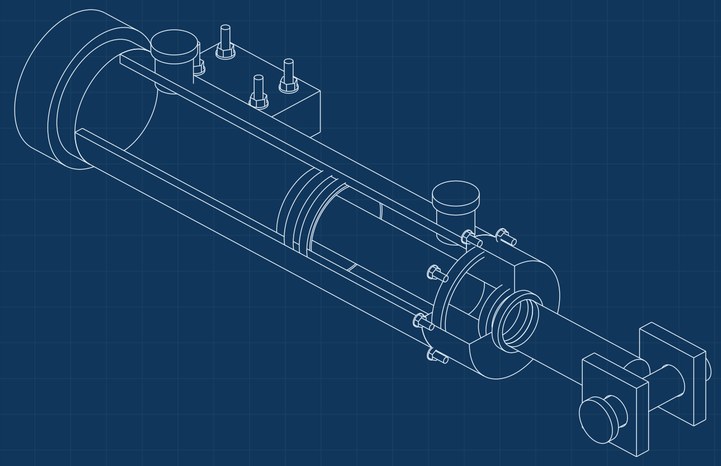

P / SUPPLY TO SELECTED WORK PORT

T / RETURN THROUGH CIRCUIT TO RESERVOIR

PILOT / CONTROL / LOAD FEEDBACK DEPENDS ON ARCHITECTURE

PRESSURE / FLOW / POWER

CYLINDER FORCE

Net force = p_cap A_piston - p_rod A_annulus, before friction. A_annulus is piston area minus rod area.

CYLINDER SPEED

Ideal piston speed = supplied volume flow / active area. Rod-side and cap-side areas differ.

HYDRAULIC POWER

Power (kW) = pressure difference (bar) x flow (L/min) / 600. Real input power is higher because of losses.

MOTOR OUTPUT

Ideal torque scales with pressure difference and motor displacement. Ideal speed scales with flow divided by displacement.

HOLDING / LOWERING / PROTECTION

DIRECTIONAL METERING

Routes work flow and controls motion. Main metering valves alone do not define safe load holding.

COUNTERBALANCE VALVE

Meters discharge under an overrunning load. Pilot assistance helps control commanded lowering.

PILOT-OPERATED CHECK

Holds reverse flow until opened by pilot pressure. It is an on/off device rather than a lowering-speed regulator.

HOIST HOLDING BRAKE

Provides mechanical static holding. Dynamic lowering depends on the designed drive and valve arrangement.

CAPACITY / GEOMETRY / FEEDBACK

HYDRAULIC LOAD SENSING

Matches pump supply to working demand. It concerns hydraulic energy distribution.

RATED-CAPACITY SUPERVISION

Uses configuration and measurements to compare load condition against the applicable crane rating.

MOMENT AND RADIUS

For a single vertical force, moment magnitude = force x perpendicular lever arm. Crane stability requires the full force system.

ANTI-TWO-BLOCK

Detects inadequate hook-to-head separation and may inhibit specified motions. It serves a different purpose from hydraulic load sensing.

FUNCTIONAL OVERVIEW ONLY. NOT A PIPE CONNECTION OR ELECTRICAL WIRING DIAGRAM. TECHNICAL BASIS: [1,3,4,7]

CONCEPTUAL MECHANICAL GEOMETRY / NOT TO SCALE / NOT FOR FABRICATION

Generic assemblies; OEM designs, circuits and ratings vary. No dimensions, settings or capacities are specified.

VANCOLE | DYLAN VANORDEN

2026-11-22 | 24 x 18 in | 10 / 11

DRAWING REGISTER / TECHNICAL REFERENCES

Scope, mechanical conventions and source links

DRAWING REGISTER

MC-01	GENERAL ASSEMBLY
MC-02	LUFF CYLINDER / INTERNAL SECTION
MC-03	AXIAL PISTON PUMP / CUTAWAY
MC-04	DIRECTIONAL VALVE / SPOOL SECTION
MC-05	HOIST WINCH / EXPLODED DRIVE
MC-06	SLEW BEARING / EXPLODED ASSEMBLY
MC-07	TELESCOPIC BOOM / INTERNAL VIEW
MC-08	OUTRIGGER / JACK ASSEMBLY
MC-09	HOOK BLOCK / EXPLODED SHEAVE ASSEMBLY
MC-10	HYDRAULIC SYSTEM / POWER + CONTROL

HOW THESE DRAWINGS WERE MADE

The mechanical illustrations are projections of original three-dimensional solid models. Hidden-line removal exposes visible contours. Cutaway openings and exploded spacing are deliberately introduced to show internal relationships.

All sheets use the same monochrome blueprint convention: white drawing lines, muted white reference lines and a blue drafting field. The diagrams are scalable vector drawings, with numbered feature locators and a secondary view on each mechanical sheet.

SCOPE AND LIMITS

These are generic engineering explanations, not measured drawings of one manufacturer or crane serial number. Tooth profiles, seals, fasteners, bearing arrangements and internal galleries are illustrative. Real designs differ; no hydraulic settings, dimensions, tolerances or capacities can be inferred.

Use the OEM operating manual, load charts and serial-specific service documentation for actual equipment. No fabrication details, pressure-adjustment instructions or bypass procedures are supplied.

PRIMARY MANUFACTURER SOURCES / CLICK A SOURCE TITLE

[1] Liebherr | Load-sensing system

Pump regulation and hydraulic demand.

OPEN MANUFACTURER DOCUMENT

[2] Liebherr | Telescoping technology

Cylinder / rope-pull and single-cylinder pinning architectures.

OPEN MANUFACTURER DOCUMENT

[3] Sun Hydraulics | Counterbalance and pilot-check technical tip

Load holding and modulating versus on/off control. June 2023.

OPEN MANUFACTURER DOCUMENT

[4] Danfoss | General orbital motors

Hydraulic systems, leakage and holding brakes. Pages 22-23.

OPEN MANUFACTURER DOCUMENT

[5] Grove | AT700B specifications

Historical example of crane hydraulic and mechanical architecture.

OPEN MANUFACTURER DOCUMENT

[6] Liebherr | VarioBase variable supporting base

Model-specific monitored support configurations.

OPEN MANUFACTURER DOCUMENT

[7] Grove | GRT8120 operator manual, Control 702-02

Example of rated-capacity limiter functions and crane controls.

OPEN MANUFACTURER DOCUMENT

[8] Grove / Manitowoc | Manuals portal

Obtain the documentation for the applicable model and serial number.

OPEN MANUFACTURER DOCUMENT

[9] Danfoss | Series 45 G Frame open-circuit axial piston pumps

Rotating group, pistons, swashplate and porting concepts.

OPEN MANUFACTURER DOCUMENT

[10] Parker | Catalog 2400 / mobile control valves

Directional spools, metering and compensation examples.

OPEN MANUFACTURER DOCUMENT

SOURCE REFERENCE DATE: 2026-11-22. GENERAL MECHANICS ARE EXPLAINED IN ORIGINAL WORDING.

VANCOLE | DYLAN VANORDEN

2026-11-22 | 24 x 18 in | 11 / 11